# Instruction Manual

MCR / TSR series
Multi-Channel
Remote Controls (Non-alpha versions)

This manual covers the installation and operation of the following products:

MCR210
MCR220
MCR250
MCR310
MCR320
MCR410
MCR420
TSR200
TSR410

CPI Communications, Inc. • 941 Hensley Lane • Wylie, TX 75098-4909
Phone: (972) 429-7160 • WATS (800) 869-9128 • FAX (888)437-5320 or (972) 429-7165

# *Contents*

Compatibility Chart ..... Page 2
Specifications ..... Page 3
General Information ..... Page 4
Pre-Installation ..... Page 4
Installation ..... Page 4
Operation ..... Page 4
Parallel Operation ..... Page 5
Motorola Trunking ..... Page 5
Parts List ..... Page 6
Front Panel PCB Layout ..... Page 8
Front Panel Schematic ..... Page 9
Main PCB Layout ..... Page 10
Main PCB Schematic - Sheet 1 ..... Page 11
Main PCB Schematic - Sheet 2 ..... Page 12
Main PCB Schematic - Sheet 3 ..... Page 13
Warranty ..... Page 14

The following table lists the MCR / TSR remote models and the termination panels and radios that they are compatible with.

| **Remote** | **Term Panel** | **Radio** |
|---|---|---|
| MCR210, MCR220, MCR250 | MCP200 | Motorola - Radius M200<br>Motorola - Maxtrac 300 |
| MCR210, MCR220, MCR250 | MCP200G | Motorola - Radius GM300 |
| MCR310, MCR320 | MCP300 | Midland - Syntech XTR |
| MCR410, MCR420 | MCP400 | Kenwood - TK630, 730, 830 |
| TSR200 | TSP200 | Motorola - Maxtrac 800 B7 model |
| TSR200 | TSP209 | Motorola - Maxtrac 900 B7 model |
| TSR410 | TSP400 | Kenwood - TK930 |

# *Specifications* Subject to change without notice.

| | |
|---|---|
| Power input | 12 to 15 VDC @ 300 mA. or 12 VAC @ 300mA. 12 VAC wall-pack provided. |
| Indicators | LED Channel display, Transmit LED, Scan LED, Monitor LED. |
| Controls | Channel Up button, Channel Down button, handset PTT button, front panel PTT button, scan button, Monitor button, intercom button, and speaker volume control. |
| Line input level | -10 dBm to +10 dBm |
| Line output level | -10 dBm to +5 dBm adj. |
| Phone line impedance | 200K ohm on-hook, 600 ohm off-hook |
| Receive audio compression | Less than 3 dB change in output for 20 dBm change in input above threshold. |
| Dimensions | Desksets - 5.5" x 9" x 10" Weight - 5 lbs. Rack mount - Single height 19 inch panel, 6 inches deep. Weight 6 lbs. |
| Receive Audio | Speaker output is 1.2 watts with less than 3% distortion at full compression. Hook-switch mutes speaker when off-hook and earpiece level controlled by front panel volume control on telephone style models. |
| Maximum number of parallel remotes | 50 |
| Connections | To Phone Line: Two wire via modular jack.<br>To Handset: Four position modular jack.<br>To Desk Mic: Six position modular jack.<br>To Terminal Block (MCR250): 2 phone line, PTT, mic audio, RX audio, power and ground. |

## General Information

The MCR / TSR series of remote control units when combined with the appropriate termination panel, provide a reliable means of remotely controlling a multi-channel conventional radio or a multi-system trunking radio.
The remote provides LED channel display, channel up and down buttons, scan button with indicator, monitor button with indicator, speaker, volume control, intercom button (allows intercom between parallel remotes and the control station).
A maximum of 50 parallel remote units may be connected to the control station via the termination panel.
The remotes are available in a telephone style unit and for conventional systems a console version with desk microphone is available.

## Pre-Installation Considerations

**Power:** The remote unit may be powered from 120 volt 60 Hz AC using the supplied wall pack transformer or a 12 to 16 volt DC source may be used in place of the wall pack.
The remotes have been designed with protection against both power and telephone line surges. This circuitry requires that a high quality ground point be connected to the GND terminal of the remote. When the supplied wall pack is used a standard grounded outlet is acceptable. An ideal ground point would consist of a 1/2 inch copper rod driven at least six feet into the earth with at least a # 16 AWG copper wire connecting it to the GND terminal of the remote, taking the shortest path possible.

**Phone line:** For proper operation, use of a high quality voice grade circuit such as leased line or in-house twisted pair wiring is required. DC continuity is not required. Connection is made to the remote via the supplied six foot modular cord.

**Multiple Remotes:** Up to 50 remote control units maybe connected in parallel. (This number is a technical limit and would not be practicle in most applications.)
As parallel units are installed, the setup procedure need only be performed to the new remote(s). The existing remotes do not require readjustment.

## Installation

**Connections**

Phone line connections are made using the supplied modular line cord. Only the two center conductors, the red and green wires, are used. They are not polarity sensitive.
Power connections consist of plugging the wall pack in to the nearest grounded AC receptacle. If you need to power the remote from a DC source, remove the wall pack and connect the positive supply lead to terminal 1of J2 and the negative supply lead to terminal 2 of J2.

**Setup adjustments**

On typical installations setup adjustments require only a screwdriver.

**Line balance:** This is the first adjustment that should be made. The phone line must be terminated at the radio end by the appropriate model termination panel.
With the remote powered down, remove the four screws that secure the top half of the housing. They are accessible from the bottom of the unit with a small phillips screwdriver.
After the screws are removed, carefully lift the top half of the remote and set it off to the right. Do not unplug the cable connecting the top and bottom halves.
For telephone style remotes, power up the unit. Hold the cradle switch down and momentarily press the PTT switch on the handset. You should hear a tone on the speaker. (Adjustment of the volume control may be necessary).
While continuing to hold the cradle switch down, adjust potentiometer R10 until the tone heard is at a minimum or null setting. Release cradle switch. Line balance is complete.
For the console style units, press and hold the channel up switch while powering up the remote. You should hear a tone on the speaker. (Adjustment of the volume control may be necessary). Release the channel up switch. Adjust potentiometer R10 until the tone heard is at a minimum or null setting. Press the channel down switch. Line balance is complete.

**Receive Audio:** The receive audio input has no adjustment. The remote will function with input levels from -10 dBm to +10 dBm.

**Transmit Audio:** Potentiometer R39 control the transmit audio output. It is preset at 0 dbm and should not require adjustment. If you do need to adjust the level, the control is accessible through the bottom of the deskset style housings.

You may now power down the remote and reattach the top and bottom halves or cover. Note: Care should be taken in the hook-switch area of the telephone style units to assure proper operation.

## Operation

We have attempted to make the controls on our MCR / TSR series remotes function the same as the front panel of the radio. This is not always possible on some radio models and in some cases features that are on the radio will not be found on the remote.
After installation is complete you may power up the radio.
If you are using the radio as a control station, you must have the radio microphone plugged in to the termination panel's microphone jack and "on-hook" when the radio is powered up or the microphone will not be recognized.

Any radio functions that require a sustained depression of a button are not supported from the remote.

**Channel / System display:** The LED display gives a real-time indication as to what channel / system the radio is on. All parallel remote displays and the radio display update simultaneously.

**Scan indicator:** When scan is selected by pressing the scan button on the remote or the radio, the scan LED will illuminate and/or the appropriate horizontal bars will be displayed on the remote. Note: Some radios do not support the scan LED.

**Monitor indicator:** Operates the same as radio.

Transmit indicator: Illuminates when any remote has keyed or the local microphone has been keyed. This indicator does not flash when a channel is busy.

**Channel Up / System:** Pushed once, it will increment the selected channel / system by one. If held, will continue to increment until released.

**Channel Down / Group / Subfleet:** Pushed once, it will decrement the selected channel / group /subfleet by one. If held, will continue to decrement until released.

**Scan button:** Toggles the radio scan function.

**Monitor button:** Toggles the radio monitor function.

**PTT button (front panel):** Allows telephone style units to transmit without lifting the handset using the panel microphone. On console style units it functions the same as the desk mic PTT.

**PTT button (handset):** Off-hook it allows telephone style units to transmit with handset.

**Intercom switch:** Provides intercom capability between parallel remotes or the radio. Can be used by depressing switch and speaking into panel or desk microphone. On the telephone style units it can be used off-hook by depressing button and speaking into handset microphone.
To intercom between the radio and a remote, press and hold the intercom switch on the termination panel and speak into the local microphone while keying it.

**Parallel operation**
Up to 50 MCR /TSR series remote units may be connected in parallel.
As parallel units are installed, the setup procedure need only be performed on the new remote(s). The existing remotes do not require readjustment.

## Motorola Trunking

Since remote operation with Motorola Trunking has some unique requirements, more detail follows.
Most of the remotes operating feature are the same as the radio and therefore only the differences will be described here.

**TRANSMITTING ON A TRUNKED SYSTEM:** The remote's transmit LED will always light steady when PTT, handset or front panel, is depressed. You therefore must listen for the high-pitched "di-di-dit" talk permit tone to let you know it is OK to transmit.
Other tones such as the talk prohibit tone or the busy tone may be heard depending on system status. Refer to your radio's operating instructions for explanations of these tones. These tones will not be heard when transmitting on-hook, they will only be heard when using the handset.

**TRANSMITTING ON A CONVENTIONAL SYSTEM:** The remote's transmit LED will always light steady when PTT, Handset or front panel, is depressed. You therefore must listen for the high-pitched "di-di-dit" talk permit tone to let you know it is OK to transmit. Do not transmit if some else is using the channel. These tones will not be heard when transmitting on-hook, they will only be heard when using the handset.

**CALL ALERT ®:** When a Call Alert is received, the amber call LED will light steady and you will hear the four tones over the remote's speaker and handset earpiece. The display will not show "CA". You will continue to hear the alert tones and the call LED will stay lit until a PTT or system change is made.
Sending a Call Alert is done much the same as the on the radio, with some minor deferences. There will be no call LED activity, you must listen for the single beep to indicate the call alert has been sent. When the Call Alert is acknowledged you will hear the four beeps but there will be no call LED activity on the remote.

**TELEPHONE INTERCONNECT OPERATION:** Not supported from the remote.

SCAN LIST: Programming or altering the scan list can not be done from the remote. It must be done from the radio.

**NUISANCE DELETE SCAN FEATURE:** Not supported from the remotes.

## *Parts List*

**MCR/TSR Series Bottom PCB #700-20BB-200 Rev. D**

| Reference | Description | CPI Part # |
|---|---|---|
| **CAPACITORS** | | |
| C1, 2 | 1000uF Electrolytic | 208-2031-108 |
| C3, 11, 18 | 1uF Electrolytic | 208-4052-105 |
| C4, 6, 8, 9, 10, 16, 19, 24, 25, 27, 29 | .1uF Mono Ceramic | 208-0092-104 |
| C5 | .47uF Electrolytic | 208-4052-474 |
| C7 | 10uF Electrolytic | 208-4022-106 |
| C12, 15 | 220uF Electrolytic | 208-2021-227 |
| C13 | 4.7uF Electrolytic | 208-4042-475 |
| C14, 21, 22, 35, 36, 38, 40 | .01uF Mono Ceramic | 208-0092-103 |
| C17 | 180pF Mono Ceramic | 208-0071-181 |
| C20A, C20B | 4.7uF 100V Electrolytic | 208-2062-475 |
| C23 | 100uF Electrolytic | 208-2021-107 |
| C26 | 47pF Mono Ceramic | 208-0071-470 |
| C28, C30 | .047uF Mono Ceramic | 208-0092-473 |
| C31, 33, 34 | 20pF Mono Ceramic | 208-0001-200 |
| **DIODES** | | |
| CR1, 2, 3, 4, 5 | 1N4004 | 212-0002-004 |
| CR6, 7, 8, 11, 12, 13 | 1N4148 | 212-0001-001 |
| CR9, 10 | 1N4735A | 212-0100-008 |
| **TRANSISTORS** | | |
| Q1, 2, 4 | 2N2222 | 240-2222-000 |
| Q3 | 2N2907 | 240-2907-000 |
| Q5 | 2N7000 | 240-7000-000 |
| **RESISTORS** | | |
| R1, 8 | 10 5% 1/4W | 242-0001-100 |
| R2 | 2.7 5% 1/4W | 242-0001-027 |
| R3 | 10 Meg 5% 1/4W | 242-0001-106 |
| R4, 5, 13 | 47K 5% 1/4W | 242-0001-473 |
| R6 | 33K 5% 1/4W | 242-0001-333 |
| R7, 49, 60 | 4.7K 5% 1/4W | 242-0001-472 |
| R9 | 3.9K 5% 1/4W | 242-0001-392 |
| R11 | 270 5% 1/4W | 242-0001-271 |
| R12, 18, 37, 48 | 1K 5% 1/4W | 242-0001-102 |
| R14, 15, 17, 32, 55 | 10K 5% 1/4W | 242-0001-103 |
| R16, 34, 36, 38, 45, 51, 52, 53, 54, 58, 59 | 100K 5% 1/4W | 242-0001-104 |
| R19 | 1.8 Meg 5% 1/4W | 242-0001-185 |
| R23A, R23B | 560K 5% 1/4W | 242-0001-564 |
| R24, 25 | 200K 1% 1/4W | 242-0015-200 |
| R26, 27 | 20K 1% 1/4W | 242-0014-200 |
| R28 | 68.1K 1% 1/4W | 242-0014-681 |
| R29 | 52.3K 1% 1/4W | 242-0014-523 |
| R30 | 221K 1% 1/4W | 242-0015-221 |
| R33 | 330K 5% 1/4W | 242-0001-334 |
| R35, 46 | 1 Meg 5% 1/4W | 242-0001-105 |
| R40 | 100 5% 1/4W | 242-0001-101 |
| R41, 43 | 6.8K 5% 1/4W | 242-0001-682 |
| R42 | 3.3K 5% 1/4W | 242-0001-332 |
| R44, 47 | 27K 5% 1/4W | 242-0001-273 |
| R56 | 270K 5% 1/4W | 242-0001-274 |
| R57 | 39K 5% 1/4W | 242-0001-393 |

| Reference | Description | CPI Part # |
|---|---|---|
| **POTENTIOMETERS** | | |
| R10 | 25K Pot | 242-0101-253 |
| R31 | 1K Pot | 242-0101-102 |
| R39 | 10K Pot | 242-0101-103 |
| **INTEGRATED CIRCUITS** | | |
| U1 | Quad Op Amp | 420-L347-000 |
| U2 | Quad Op Amp | 420-2064-000 |
| U3 | Dual Op Amp | 420-1458-000 |
| U4 | Quad Analog Gate | 414-G211-000 |
| U5 | Transceiver | 420-8888-000 |
| U6 | Microcontroller | 425-1655-000 |
| U7 | Audio Power Amp | 420-0380-000 |
| **MISC.** | | |
| VR1 | Voltage Regulator | 417-7805-001 |
| VR2 | Reset Generator | 425-7757-000 |
| K1 | 4PDT Relay | 230-0004-004 |
| V1,V2 | MOV | 242-0118-201 |
| L1, 2 | Inductor | 230-0000-150 |
| Y1 | 4 Mhz Crystal | 258-0002-002 |
| T1 | 600:600 Transformer | 246-0100-003 |
| J1 | 26 Pos. Header | 228-0101-001 |
| J2 | 3 Pos. Terminal Block | 248-0020-003 |
| J3 | Bottom Entry Modular Jack | 228-0041-026 |
| J4 | 4 Pos. Mod Jack (MCR210) | 228-0041-010 |
| | 6 Pos. Mod Jack (MCR220/250) | 228-0040-016 |
| S1 | Hook Switch (MCR210) | 244-0100-009 |
| | Cap for S1 | 244-0100-008 |

**MCR/TSR Series Front PCB #700-30FP-200 Rev. 120693**

| | | |
|---|---|---|
| CR1, 2 | 1N4148 | 212-0001-001 |
| CR3, 4, 5 | Green LED | 214-0003-002 |
| CR6 | Red LED | 214-0003-001 |
| CR7 | Yellow LED | 214-0003-000 |
| D1,2 | 7 Segment Display | 214-0004-001 |
| Q1 | 2N2222 NPN | 240-2222-000 |
| R1,6 | 100K Network | 242-0116-104 |
| R2, 3, 4, 5 | 1.5K Network | 242-0116-152 |
| R7 | 1.5K 5% 1/4W | 242-0001-152 |
| R8 | 10K Volume Control | 242-0115-103 |
| U1,2 | Display Driver | 420-6810-000 |
| S1, 2, 3, 4, 5, 7, 8 | Switch, Black | 244-0030-000 |
| S6 | Switch, Red | 244-0030-002 |
| J1 | 26 Pos. Cable Assembly | 600-0TSR-025 |
| SP1 | 2 x 3 oval Speaker | 234-0001-004 |
| | 4 inch round Speaker | 234-0001-001 |

## *Front Panel PCB layout*

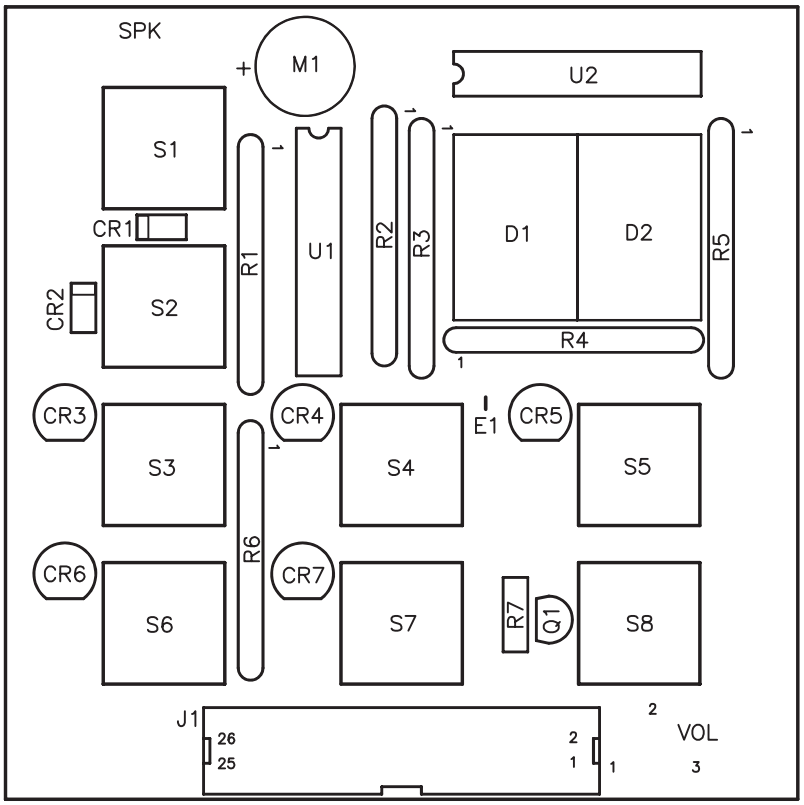

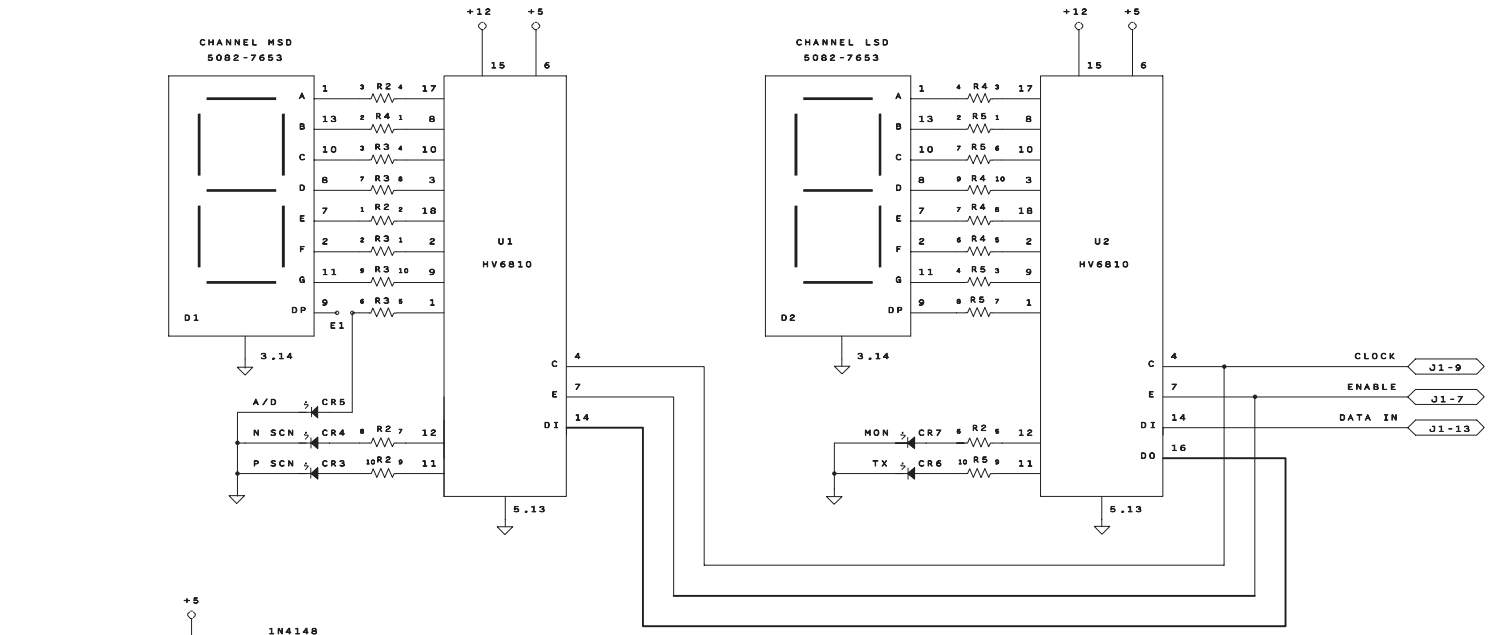


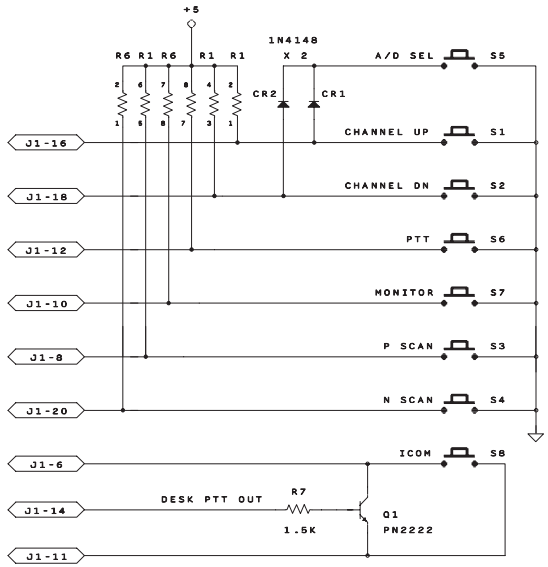


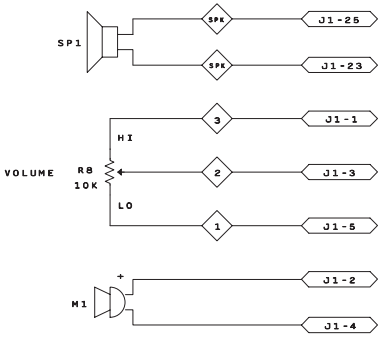


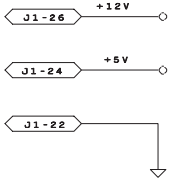


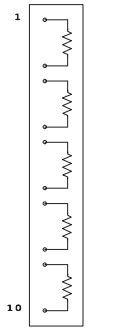


CPI Communications, Inc.

MCR210/220 Front Panel

E | C | MCR310R.P04 | SCHEMATIC DIAGRAM

DATE: 12-07-93 | SHEET 1 OF 1

Component Side View

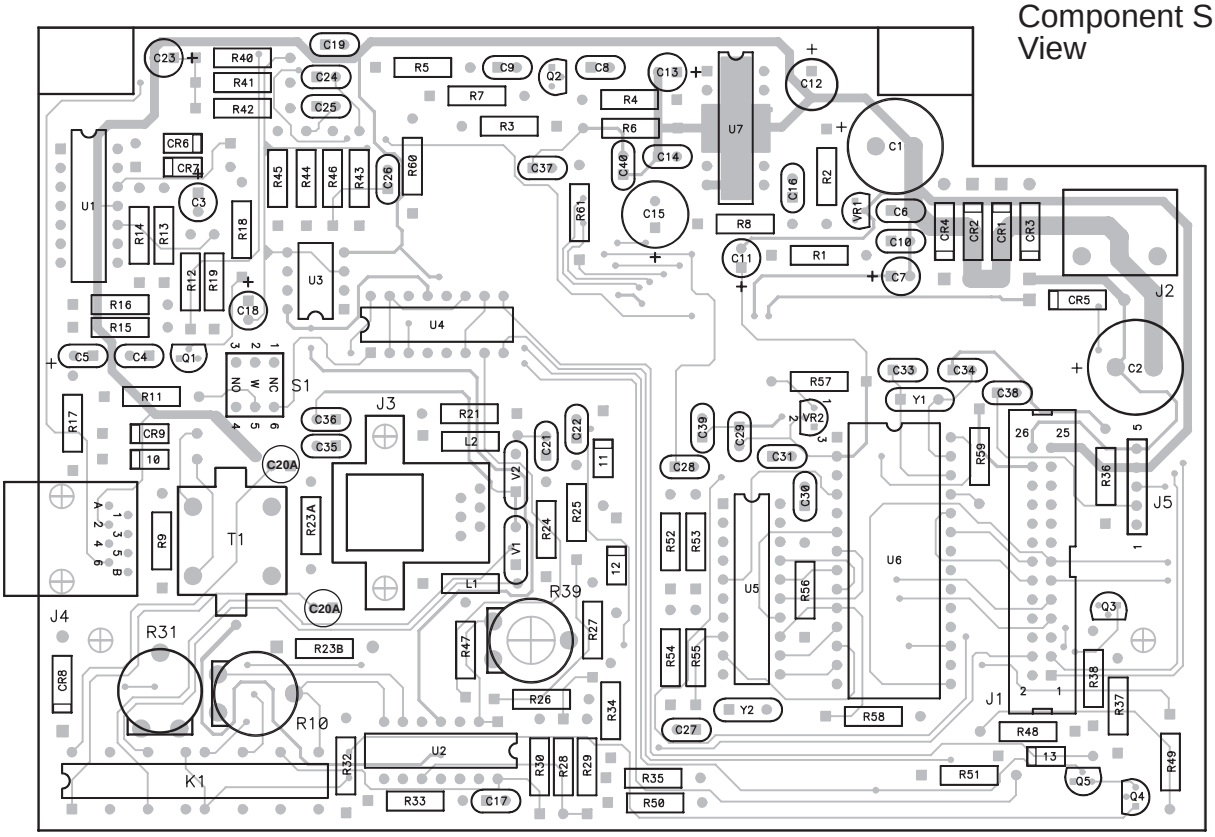


Solder Side View

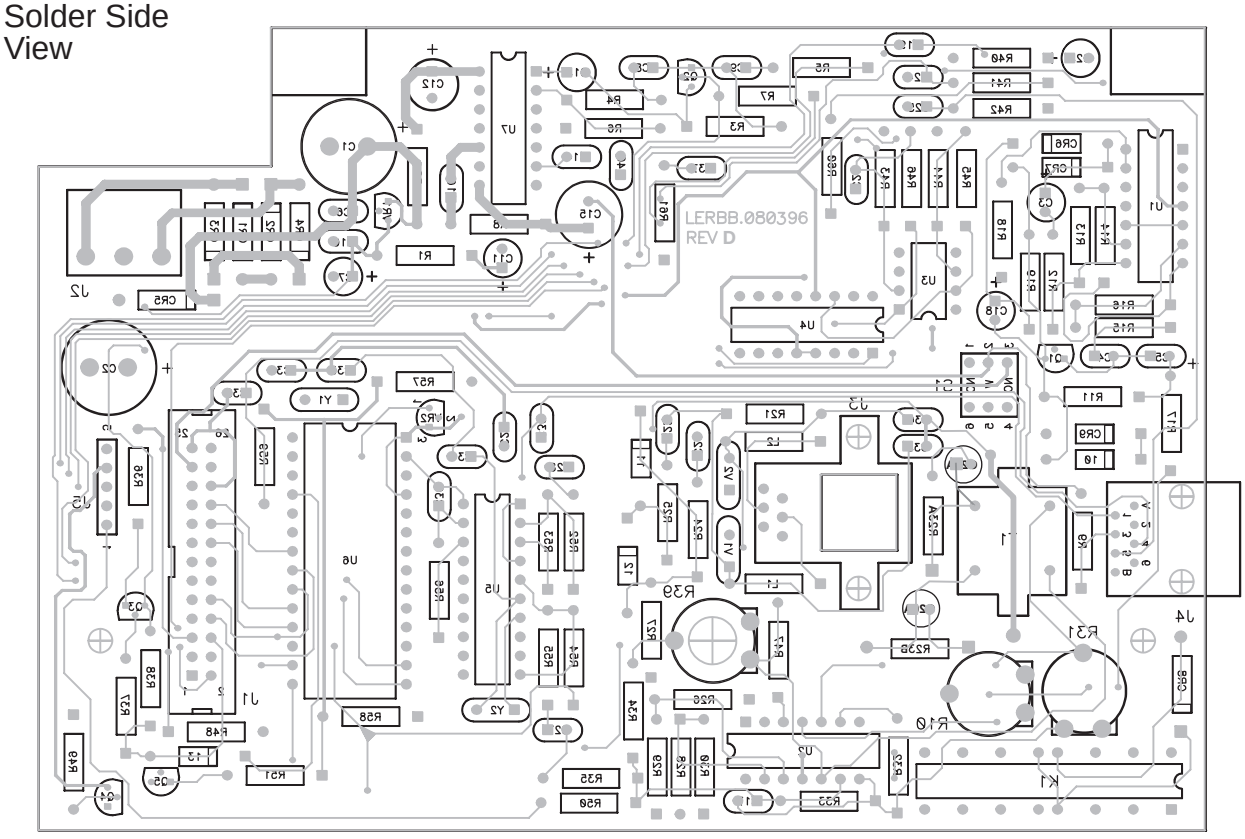

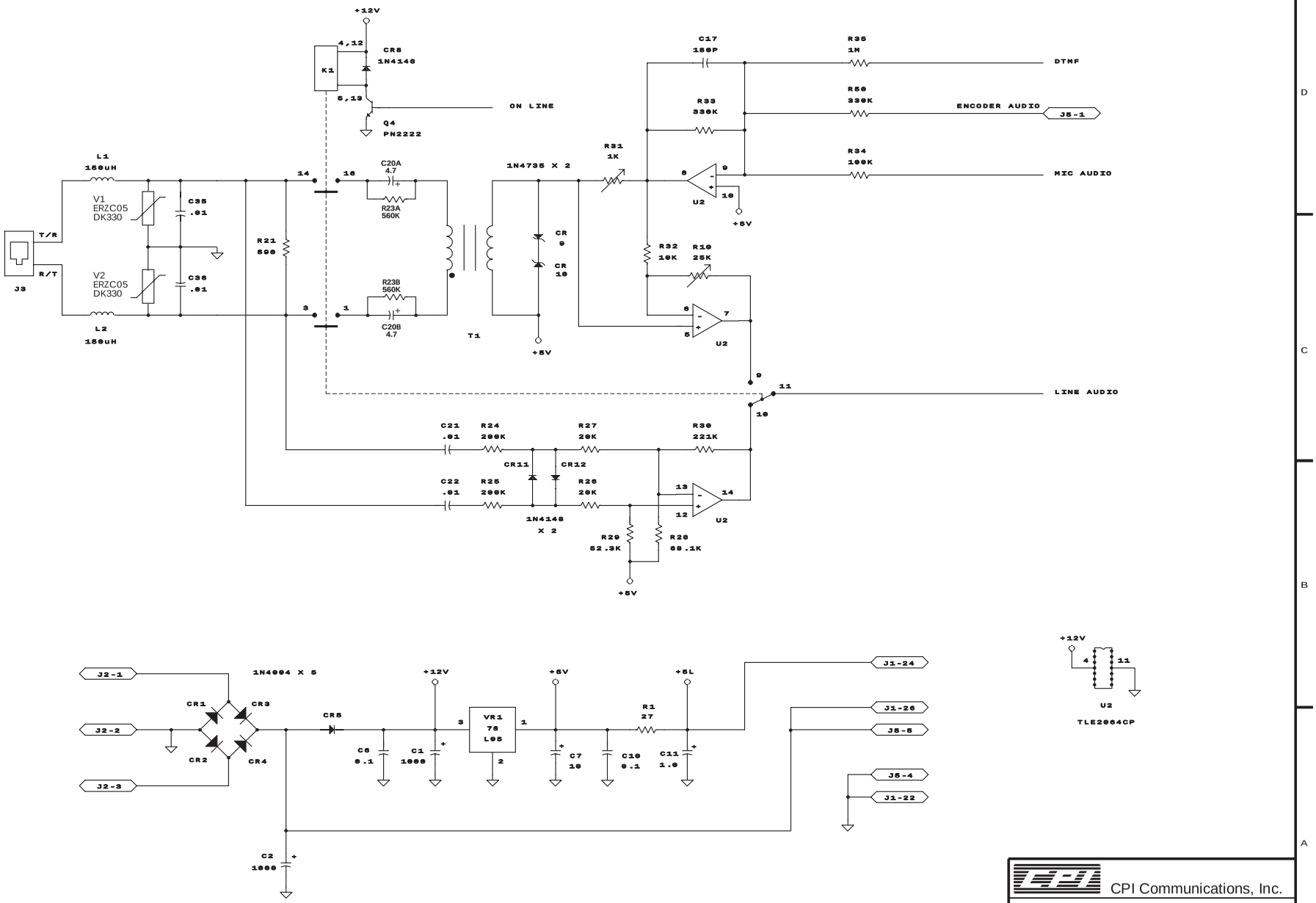


CPI Communications, Inc.

MCR Series Base Board

| | | | |
|---|---|---|---|
| E | C | LERBB.P01 | SCHEMATIC DIAGRAM |
| DATE: 08-03-96 | | SHEET 1 OF 3 | |

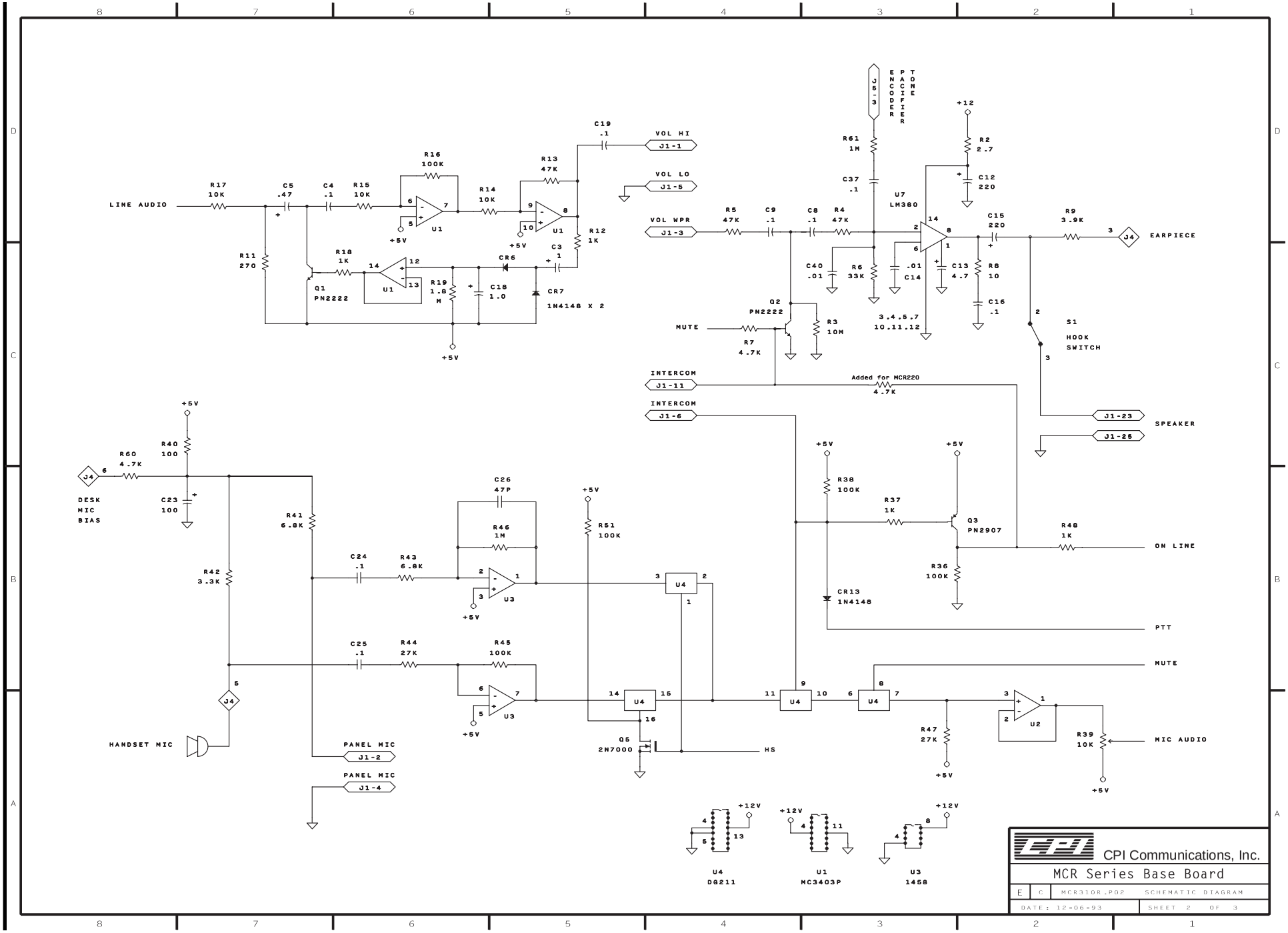
LINE AUDIO
R17 10K
C5 .47
C4 .1
R15 10K
R16 100K
R14 10K
R13 47K
C19 .1
VOL HI
J1-1
VOL LO
J1-5
R11 270
R18 1K
Q1 PN2222
R19 1.8 M
C18 1.0
CR6
CR7 1N4148 X 2
C3 1
R12 1K
+5V
VOL WPR
J1-3
R5 47K
C9 .1
C8 .1
R4 47K
J5-3
ENCODER
PACIFIER
TONE
R61 1M
C37 .1
U7 LM380
+12
R2 2.7
C12 220
C15 220
R9 3.9K
J4
EARPIECE
C40 .01
R6 33K
C14 .01
C13 4.7
R8 10
C16 .1
3,4,5,7 10,11,12
Q2 PN2222
MUTE
R7 4.7K
R3 10M
S1 HOOK SWITCH
INTERCOM
J1-11
Added for MCR220 4.7K
INTERCOM
J1-6
J1-23
SPEAKER
J1-25
R40 100
R60 4.7K
DESK MIC BIAS
C23 100
R41 6.8K
R42 3.3K
C26 47P
R46 1M
C24 .1
R43 6.8K
U3
R51 100K
U4
R38 100K
R37 1K
Q3 PN2907
R48 1K
ON LINE
R36 100K
CR13 1N4148
PTT
C25 .1
R44 27K
R45 100K
MUTE
HANDSET MIC
PANEL MIC
J1-2
PANEL MIC
J1-4
Q5 2N7000
HS
R47 27K
U2
R39 10K
MIC AUDIO
+12V
U4 DG211
U1 MC3403P
U3 1458
CPI Communications, Inc.
MCR Series Base Board
E C MCR310R.P02 SCHEMATIC DIAGRAM
DATE: 12-06-93
SHEET 2 OF 3

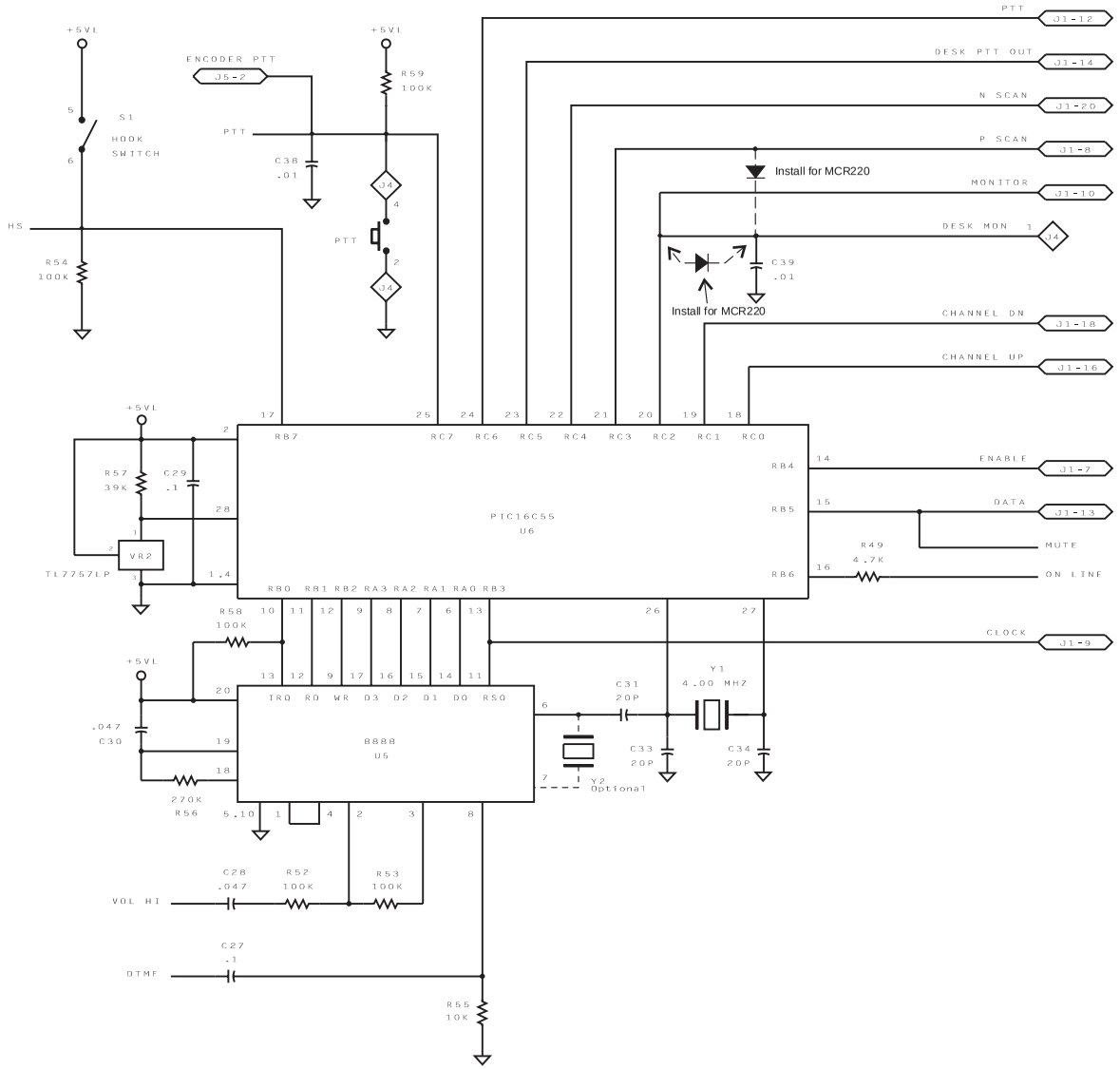


CPI Communications, Inc.

MCR Series Base Board

E | C | MCR310R.P03 | SCHEMATIC DIAGRAM

DATE: 12-06-93 | SHEET 3 OF 3

Location of adjustable controls.

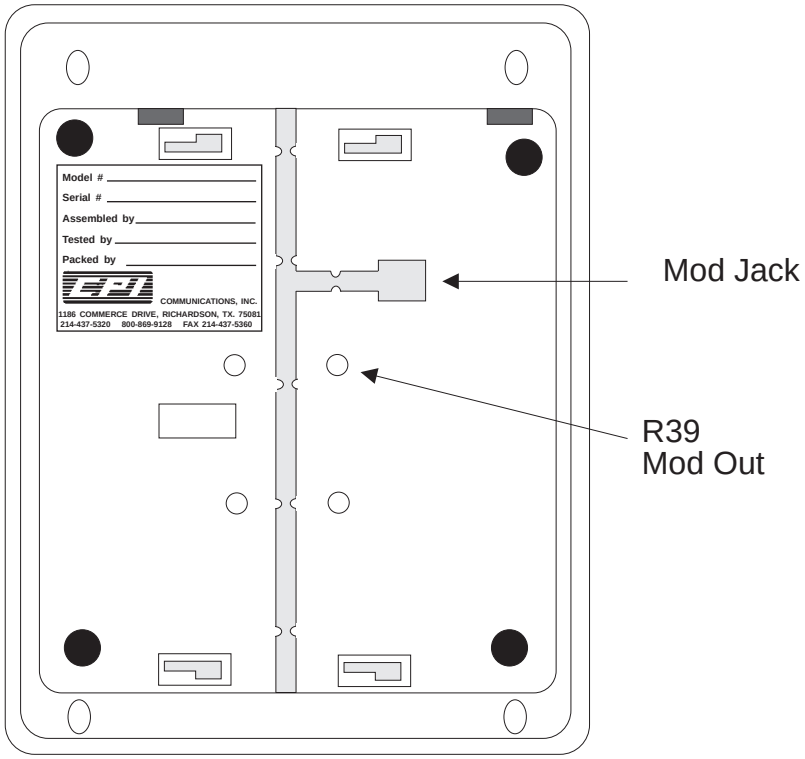


Internal Adjusments, See page 10 for location.
R94 - Line Impedance
R10 - Line Balance

## *Warranty*

CPI Communications, Inc. warrants each product manufactured by it to be free from defective material and workmanship and agrees to remedy any such defects or to furnish a new part in exchange for any part of any unit of its manufacture which under normal installation use or service discloses such defects, provided the unit is delivered by the customer to our authorized service center intact, with all transportation charges pre paid within two years from date of shipment to the original purchaser. Exceptions are semiconductors which carry only the manufacturer's standard warranty and lamp indicators and fuses which are warranted to be operational when shipped from the factory. No credit will be given for unauthorized repair.
This warranty does not extend to any of our products which have been subjected to misuse, neglect, accident, incorrect wiring not our own, improper installation, or to use in violation of instructions furnished by us nor extended to units which have been repaired or altered outside of our factory or authorized service center, nor to cases where the serial number thereof has been removed, defaced, or changed, nor to accessories used therewith not of our own manufacture, nor to finish or appearance items.

This warranty is in lieu of all other warranties expressed or implied and no person is authorized to assume for us any other liability in connection with the sale of our products.

Please Note: CPI products are not authorized for use in applications where nonperformance may be life threatening, or where substantial risk to life and property may be present, without express written consent of the president of CPI Communications, Inc. CPI Communications, Inc. shall never be liable for consequential or indirect damages.

®Motorola, Maxtrac and Radius are trademarks of Motorola.